SIB064 PMT Sensor Interface Board H8500D Series

Product Sheet

Product Overview

- Mounting board for Hamamatsu H8500D 64 channel MAPMT
- Provides 64 channel interface to data acquisition systems
- Separate high voltage input for PMT cathode bias
- High speed preamplifier for last dynode output
- Leading edge, constant fraction, and zero slope discriminators
- Adjustable gain and discriminator thresholds
- 100% compatible with Vertilon's PhotoniQ multichannel DAQs
- No external power supply required

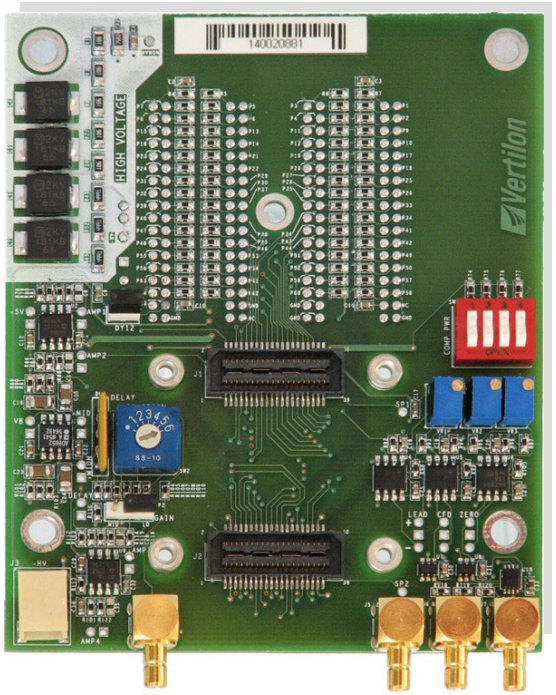

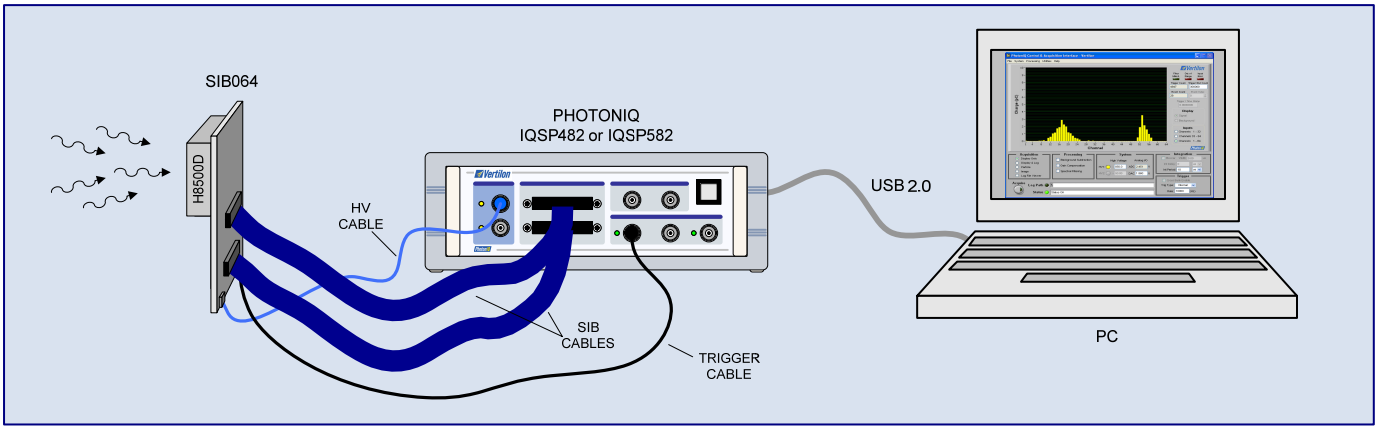

Typical Setup

Vertilon Corporation, 66 Tadmuck Road, Westford, MA 01886 / Tel: (978) 692-7070 / Fax: (978) 692-7010 / www.vertilon.com

Description

The SIB064 multianode photomultiplier tube interface board provides the mechanical and electrical connectivity between the Hamamatsu H8500D 64 anode PMT and external signal processing electronics such as Vertilon's PhotoniQ multichannel data acquisition systems. The H8500D is mounted to the bottom side of the SIB064 through 148 socket pins that connect the PMT's 64 anode signals, high voltage input, and last dynode output to the board. The anode signals are routed to two connectors located on the top of the board that each connect to a specialized high density coaxial cable assembly. This arrangement allows the SIB064 to be conveniently mounted directly into the user's optical setup with the PMT facing outward from the bottom of the board and the sensor interface board (SIB) cables exiting from the top. The SIB cables carry the 64 anodes from the H8500D to the PhotoniQ where the charge from each is separately integrated, digitized, and sent to a PC for display or further signal processing. The negative high voltage bias to the PMT's cathode is supplied directly from the PhotoniQ on a high voltage cable to a dedicated connector on the SIB064. For applications utilizing the last dynode output of the H8500D, the SIB064 includes a two stage high speed preamplifier whose output is available on an SMB connector. When critical timing and triggering are required, this output can be connected to a separate high performance external discriminator. Alternatively, one of the three on-board discriminators can be used when the timing requirements are not as stringent. The outputs from a leading edge, constant fraction, and zero slope discriminator — which respectively generate trigger signals based on a threshold, percentage of pulse height, and pulse peak — are each available on an SMB connector. Several user adjustments are included for optimizing system gain and trigger thresholds for the discriminators.

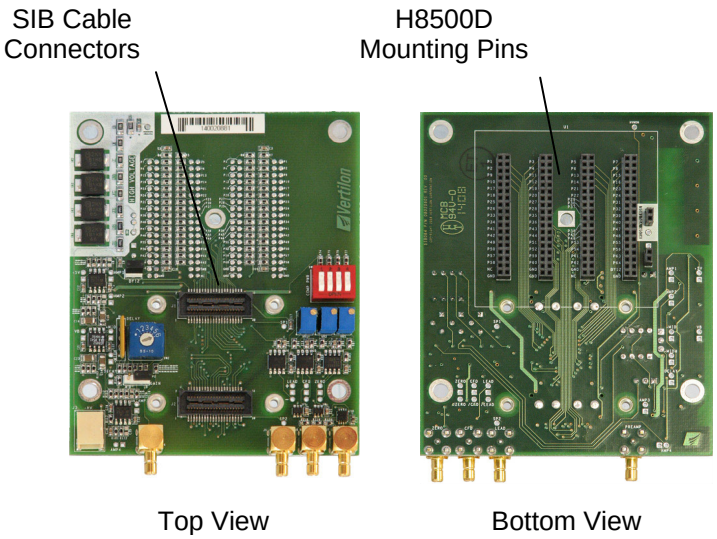

Electrical Interface Circuits

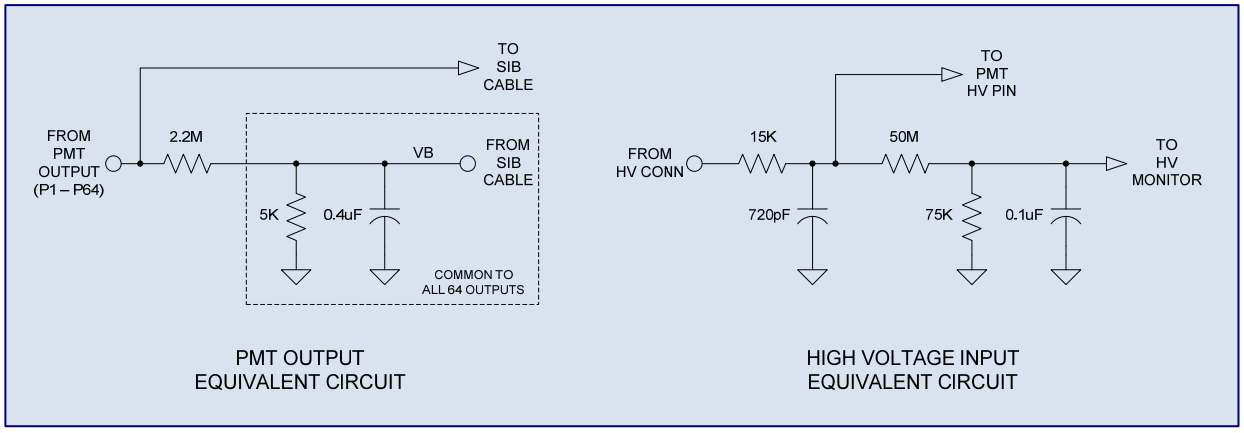

Functional Block Diagram

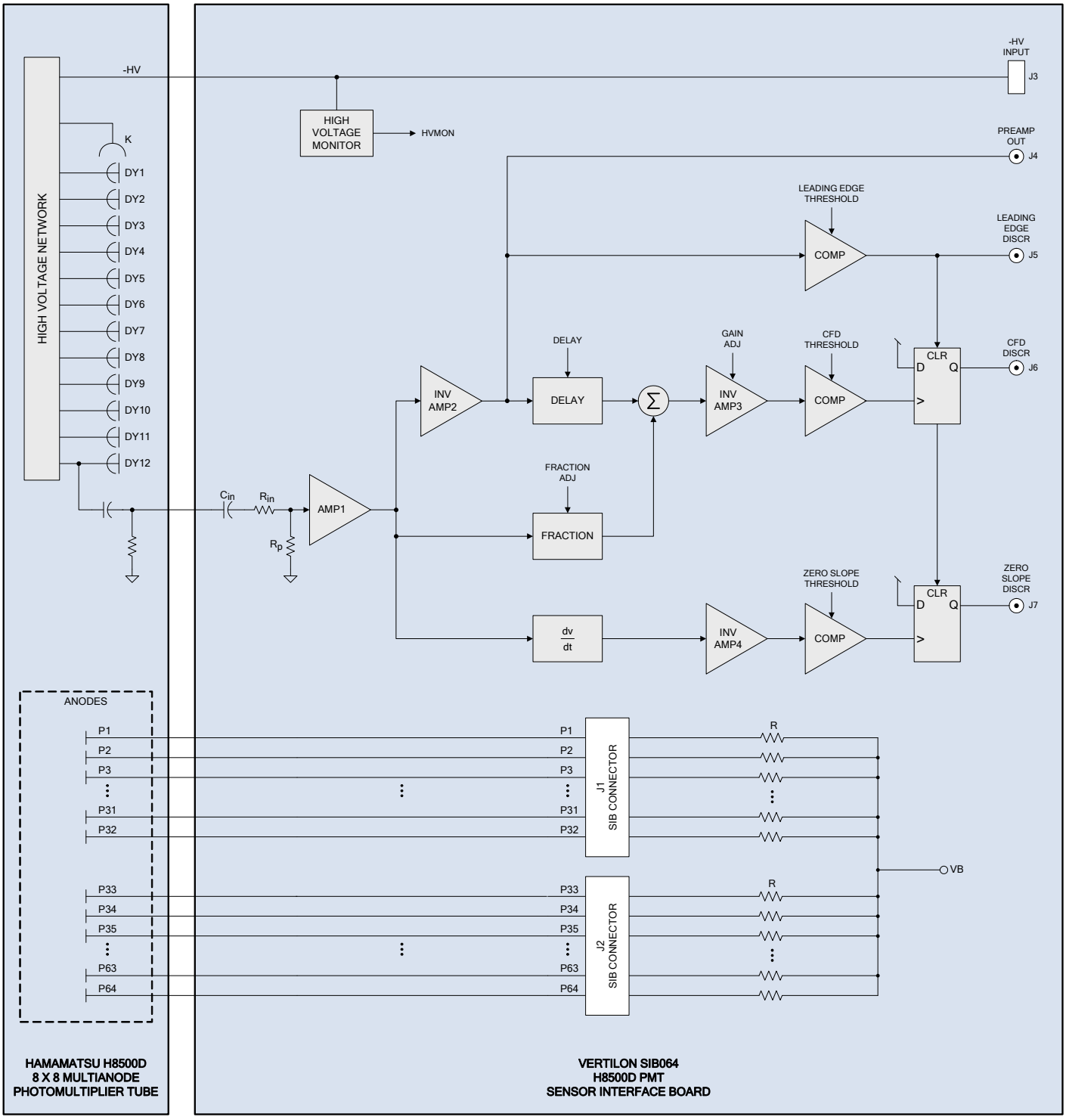

Mechanical Data

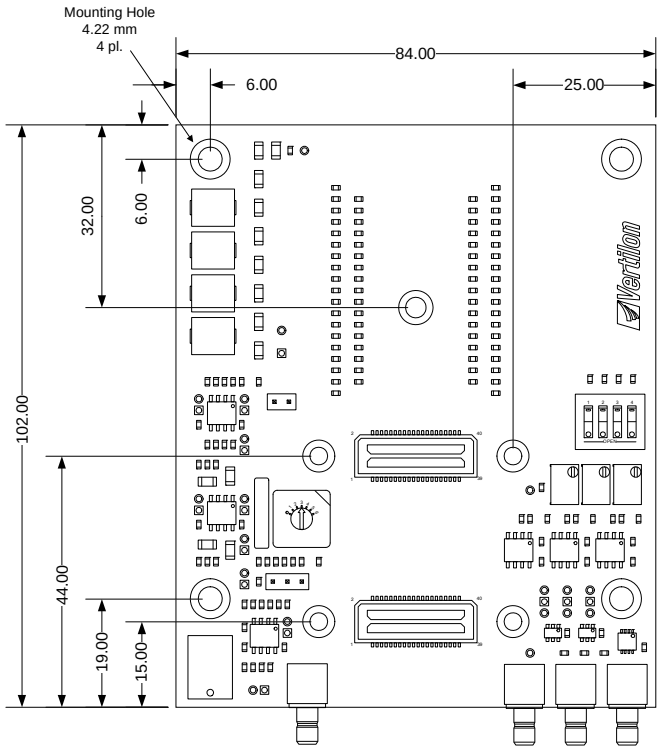

ALL DIMENSIONS IN MILLIMETER

Specifications	
Description	**Specification**
Number of Anode Circuits	64
Last Dynode Preamplifier Gain	18.6 dB, inverting
Leading Edge Discriminator Time Delay	5 nsec
Leading Edge Discriminator Time Walk Input Signal Range: 30 - 150mV	3 nsec
Constant Fraction Discriminator Time Delay	6 nsec
Constant Fraction Discriminator Time Walk Input Signal Range: 10 - 100mV	0.8 nsec
Zero Slope Discriminator Time Delay	6 nsec
Zero Slope Discriminator Time Walk Input Signal Range: 20 - 200mV	1.5 nsec
Discriminator Jitter	<500 psec
Supply Voltage	+5.0 V
Supply Current	+75 mA
Width	84 mm
Height	102 mm
Length	2.5 mm (PCB thickness only)

General Safety Precautions

Warning: HIGH VOLTAGES – Voltages can exceed 2000V

Operate device within specified range

Electrostatic discharge sensitive

Do not operate in wet, damp or explosive atmosphere

See H8500D data sheet for specific handling information

Ordering Information

Sensor interface board (SIB) cables ordered separately. Specify part number SBCxxx, where “xxx” equals length in centimeter.

Order PhotoniQ data acquisition system separately. SIB064 directly compatible with Vertilon IQSP482 and IQSP582 64 channel data acquisition systems. See PhotoniQ User Manual for performance specifications.

High voltage cable not included with SIB064. Included with high voltage power supply option HVPS001 or HVPS002 for IQSP482 / IQSP582.

See SIB064 User Guide for complete specification.

Vertilon

Vertilon Corporation has made every attempt to ensure that the information in this document is accurate and complete. Vertilon assumes no liability for errors or for any incidental, consequential, indirect, or special damages including, without limitation, loss of use, loss or alteration of data, delays, lost profits or savings, arising from the use of this document or the product which it accompanies. Vertilon reserves the right to change this product without prior notice. No responsibility is assumed by Vertilon for any infringements of patents or other rights of third parties which may result from its use. No license is granted by implication or otherwise under the patent and proprietary information rights of Vertilon Corporation.

© 2008 Vertilon Corporation, ALL RIGHTS RESERVED

PS2712.1.0 Apr 2008

Vertilon Corporation, 66 Tadmuck Road, Westford, MA 01886 / Tel: (978) 692-7070 / Fax: (978) 692-7010 / www.vertilon.com